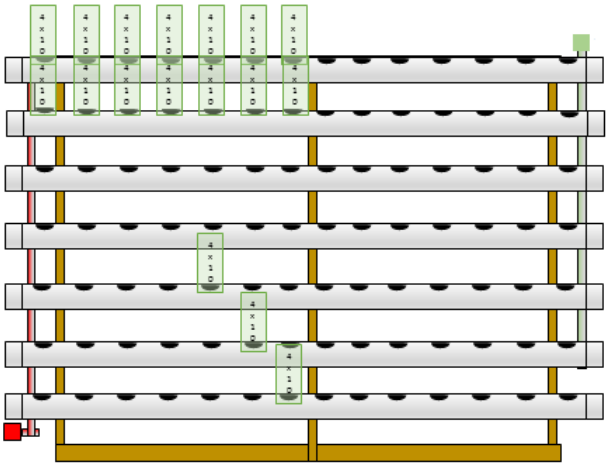

(/uploads/5/7/5/9/5759721/s339185913934037905_p341_i3_w444.png)

(/uploads/5/7/5/9/5759721/s339185913934037905_p341_i4_w1280.png)

3x6x8 HYDRO A-FRAME GARDEN 196 PLANTS 4 inch pipe

$1,080.00 - $5,400.00

TRUCK SHIP BY BUYER 240 Pounds Each = $240 to $290 Shipping

Lumber non-combustible building material for weather protected applications. Each piece stamped Underwriters Laboratories, Inc. stamp indicating that the product has code recognized classifications for surface burning characteristics

4" Diameter PVC Schedule 40 Pipe and Pressure Fittings are used in irrigation, underground sprinkler systems, swim pools, outdoor applications and cold water supply lines.
ASTM D 1784 ASTM D 1785 ASTM D 2665 FHA UM 79a FEDERAL SPECIFICATION L-P-320a\nNSF STANDARD 14 AND 68

All supply and drainage fittings will be compression type (1/4 PE) tube and their associated fittings. Water level can be controlled by adjusting the height inside each tube.

QUANTITY

--

Quantity

0

Add to Cart

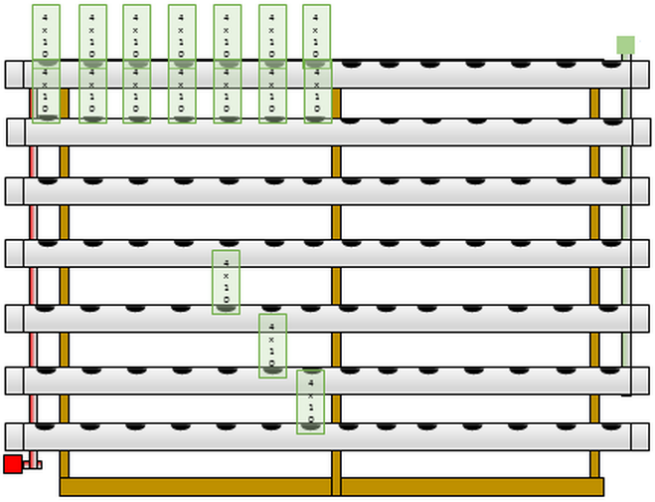

(/uploads/5/7/5/9/5759721/hydro-ponic-1_1_orig.png)

QUANTITY	COST	WEIGHT
One (1) A FRAME GARDEN 196 plants	$1080	240
Two (2) A FRAME GARDEN 392 plants	$2160	480
Three (3) A FRAME GARDEN 588 plants	$3240	730
Four (4) A FRAME GARDEN 784 plants	$4320	960
Five (5) A FRAME GARDEN 980 plants	$5400	1200

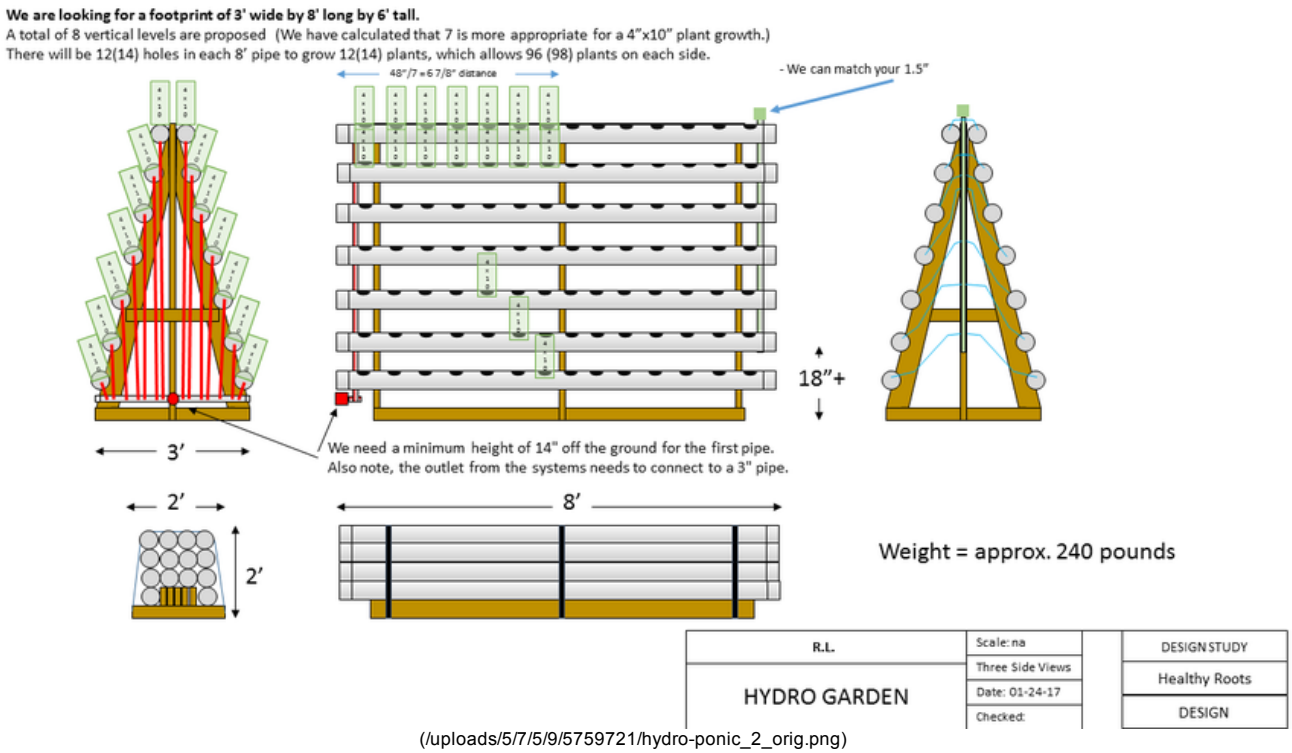

(/uploads/5/7/5/9/5759721/hydro-ponic_2_orig.png)